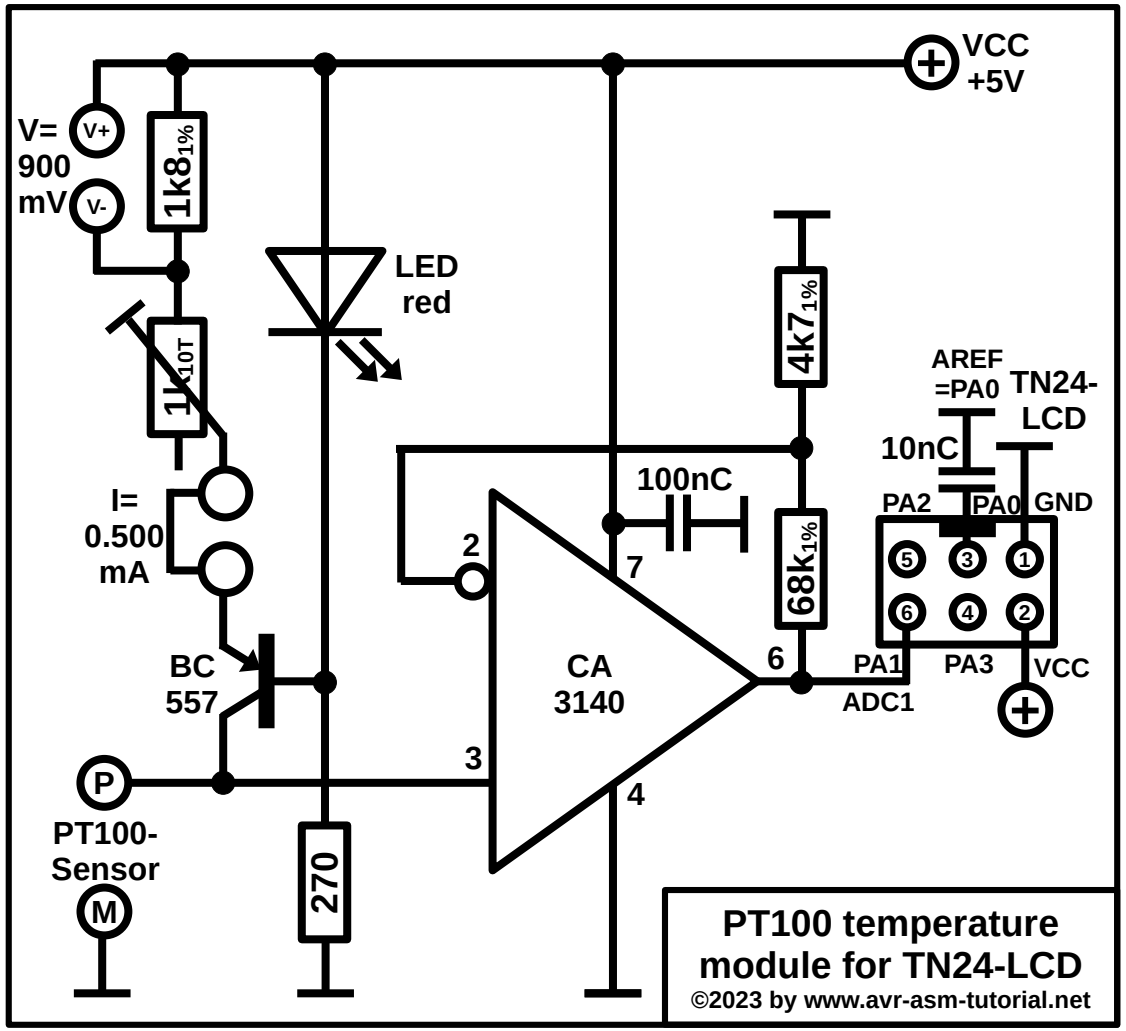
VCC
+5V
V=
900
mV
V+
V-
1k8 1%
LED
red
1k 10T
I=
0.500
mA
BC
557
P
PT100-
Sensor
M
270
2
3
7
6
4
CA
3140
100nC
4k7 1%
68k 1%
AREF
=PA0
TN24-
LCD
10nC
PA2
PA0
GND
5
3
1
6
4
2
PA1
ADC1
PA3
VCC
PT100 temperature
module for TN24-LCD
©2023 by www.avr-asm-tutorial.net

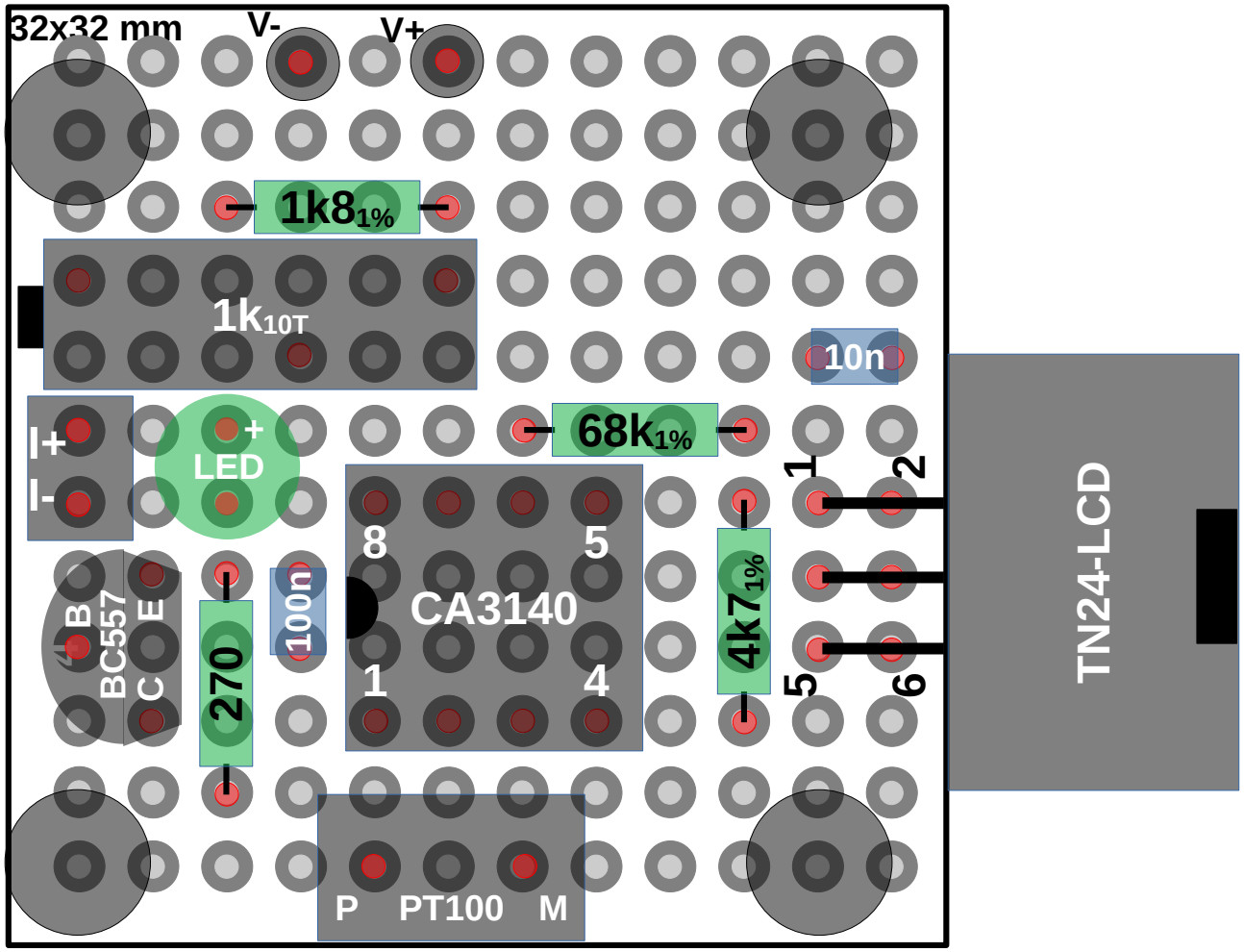
32x32 mm
V-
V+
1k8 1%
1k 10T
10n
68k 1%
I+
I-
+
LED
8
5
CA3140
1
4
B
BC557
C
E
270
100n
4k7 1%
1
2
5
6
TN24-LCD
P
PT100
M